PRESSTEK
A SMARTER WAY TO PRINT

PRESSTEK 34DI

Site Preparation Guide

This document will serve as a guide for site preparation for installation of a Presstek 34DI printing press. Information contained in this document is intended to enable a correct and problem-free installation. Uncrating, moving, positioning of press components and installation will be performed by Presstek LLC.

Safety Notice

The Presstek 34DI contains Class 1 Laser Products using high voltage power supplies and laser light sources. These are located behind protective covers. These covers and any warning labels must not be removed or altered in any way. There is no danger to persons or equipment when the product is operated in accordance with directions provided by Presstek in this and other publications.

Presstek, LLC.
200 Innovative Way, Ste. 1350
Nashua, NH 03062 U.S.A.
603-595-8585
www.presstek.com 042817

Statement of Liability

Information contained herein is provided solely as a guide to site preparation for installation of a Presstek 34DI printing press. Presstek and/or any parties association with this installation are not liable and do not assume any responsibility for any errors, accidents, personal injuries, consequential or incidental damages, loss of profits, loss of use or any other dangers that may result from the misuse or misinterpretation of any information, real or implied, contained in this document.

Copyright 2017 Presstek, LLC. All rights reserved. DI is a trademark of Presstek, LLC.

Please FAX pages 7-15 to 603-546-4234 or email to: orderadmin@presstek.com

Table of Contents

Specifications…….. 3

Electrical Connections and Networking……...4

Electricity Usage……..5

Thermal Analysis……..5

Room Temperature & Humidity Requirements...5

Transport/Shipping Dimensions……6

Jack Points & Weight…… 6

SITE PREPARATION GUIDE - CUSTOMER….7
(This section to be filled out by Presstek personnel with the customer)

Paper, Inks, Waste Disposal & Recycling……...17

A Note Regarding Customer Supplies……18

Supplies for Ongoing Operation……19

Specifications (L/W/H dimensions)

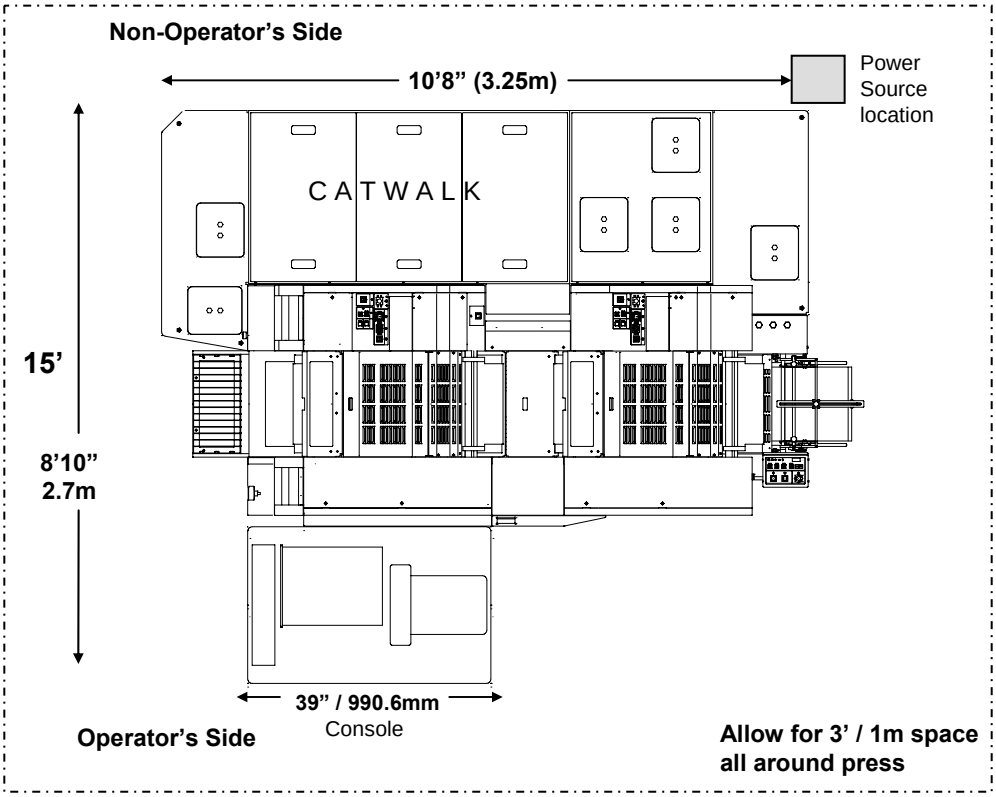

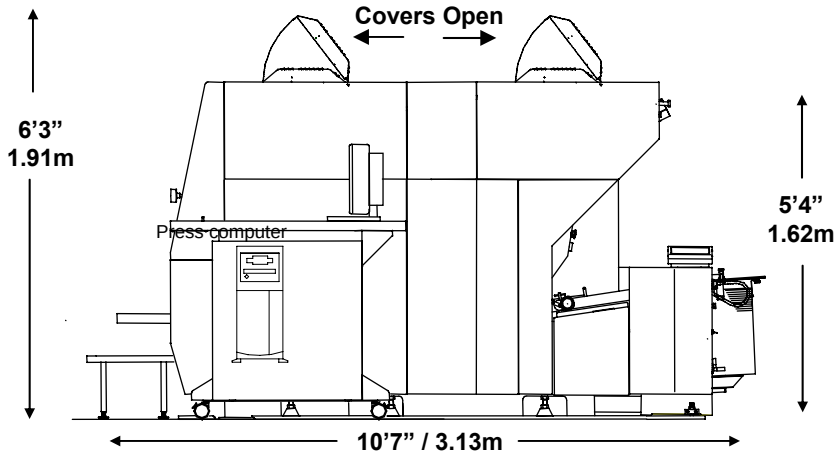

Electrical Connections & Networking:

Press: **U.S. 208v Three (3)-Phase Max. rated current: 60Hz / 60 Amp**
Plus One (1) 115V outlet for press viewing station – a duplex receptacle would provide additional convenience.

RIP Computer: Minimum of three (3) standard wall outlets (U.S. – 110 v). Line protector and/or UPS battery-backup power system is recommended. Customer is responsible for providing a network patch cable from RIP computer to DI Press (not to exceed 300 ft. in length).

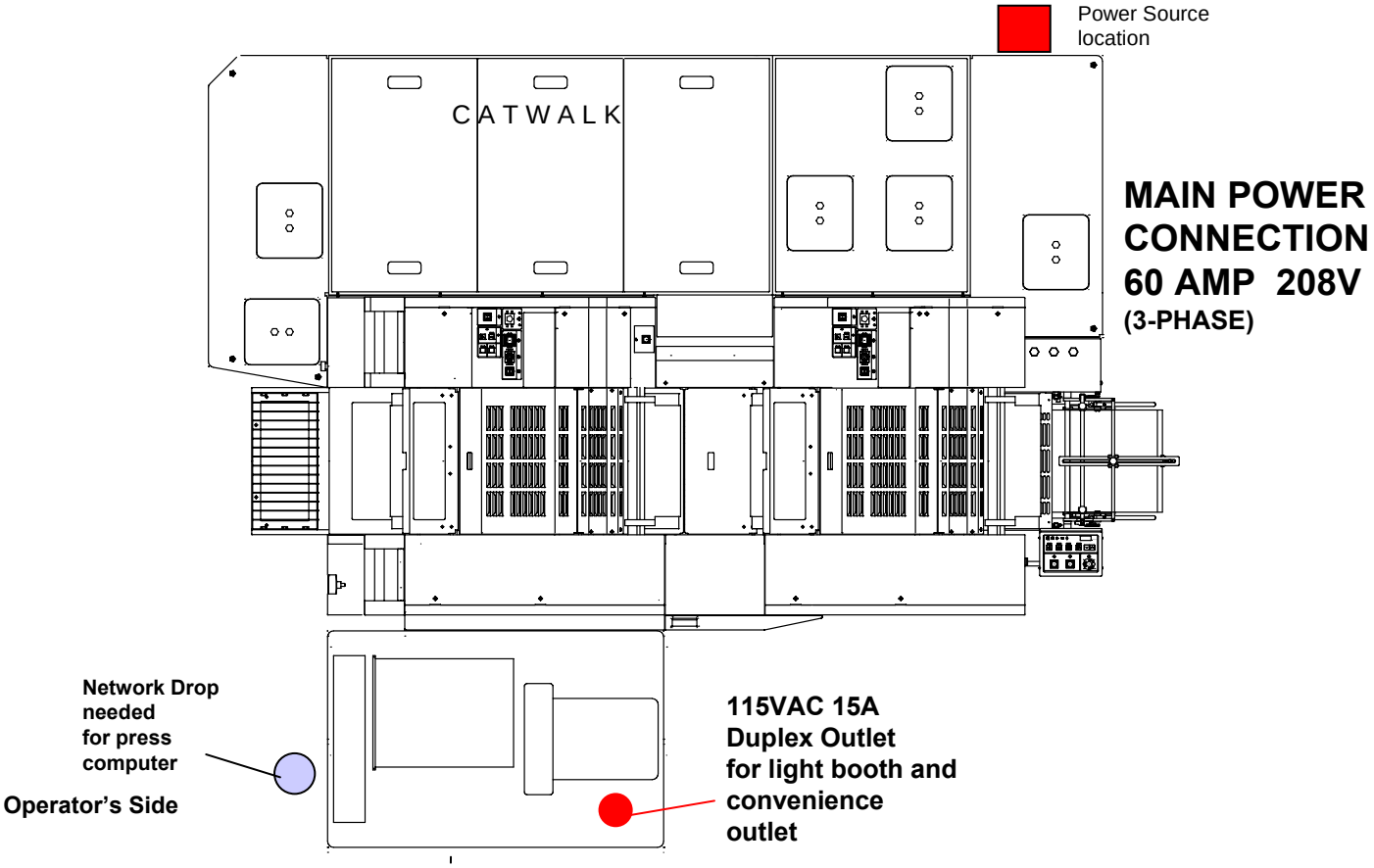

NOTE: The DI Press should not be on the main customer network due to large file sizes being transferred from the RIP computer.

The DI Press is networked to the RIP computer in a peer-to-peer configuration.

Prepress Area

RIP Computer: Minimum of three (3) standard wall outlets (U.S. – 110 v, Europe – 220v)

Line protector and/or UPS battery-backup power system is recommended.

NOTE: Customer must provide a CAT5 or better patch cable with RJ45 ends, to connect the RIP computer to the DI press as well as a network drop at the press.

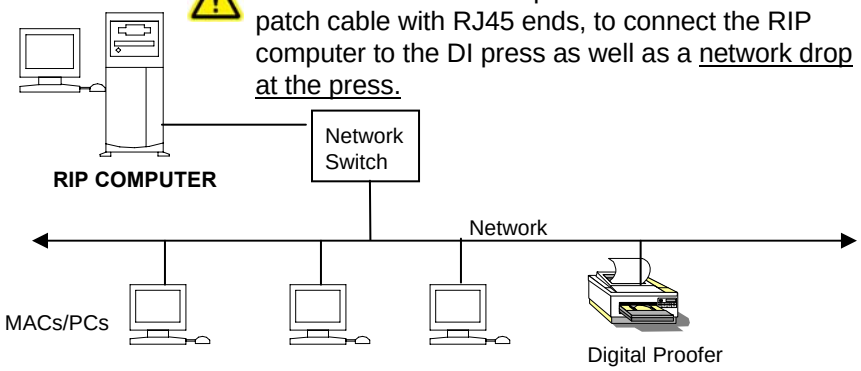

Electricity Usage – KWH Kilowatts per hour

3-phase
- Chiller only 3.5
- Press on standby, chiller running, not printing or rotating: 4.81
- During imaging: 6.47

1-phase
- Printing 7000 IPH w/o IR Dryer: 7.85
- IR Dryer: 9.86

Thermal Analysis (Heat Output) for the 34 DI Press:

Definitions: 1 KWH = 3412 BTUs

		KWH	BTU
3-phase	Air compressor	.141	481
	Chiller	3.5	11,924
	Initial Power	4.53	15,457
	Standby	4.81	16,412
	Imaging	6.47	22,076
	Printing	7.85	21,719
1-phase	IR dryer	9.86	33,643

Room Temperature and Humidity Requirements 24/7:

Humidity Controlled Required: 50-60% RH Stable

Temperature Required: 68-77 F / 20-25 C

NOTE: A constant/stable temperature and relative humidity is critical to the operation of the Presstek 34DI. Fluctuations in either value outside of the recommended range will adversely affect press operation, press durability and print quality. Room temperature and humidity should be monitored on a 24-hour basis.

A thermostat should be located in close proximity to the press.

Direct heat sources SHOULD NOT be placed near press.

Overhead ventilation units SHOULD NOT be placed directly above the press.

Transport/Shipping Dimensions

The system will be transported in jigs, crates and cartons before being unpacked on site. These containers are large. Therefore, particular attention MUST be paid to ceiling heights, Door openings and hallways/corridors. All crates MUST be transported upright.

Crate dimensions are as follows:

	Width (in./mm)	Depth (in./mm)	Height (in./mm)	Weight (lbs/ kg)
Press	59.25 / 1505	118.5 / 3009.9	79 / 2006	9020 / 4086.1
Accessories Box 1	59.5 / 1510	88.5 / 2247.9	55 / 1397	1782 / 807.3
Accessories Box 2	48.5 / 1231.9	56.5 / 1435.1	49 / 1244.6	726 / 328.9
Accessories Box 3	60 / 1524	42 / 1066.8	48 / 1219.2	200 / 90.6
Lifting Guage	70.5 / 1790.7	52 / 1320.8	19 / 482.6	704 / 318.9
RIP Computer	31 / 787.4	48/ 1219.2	26 / 660.4	126 / 57.1

RIP Computer is skid with two (2) boxes

Jack Points and Weights

Jack up bolt position and point weight (mark = jack up bolt position)

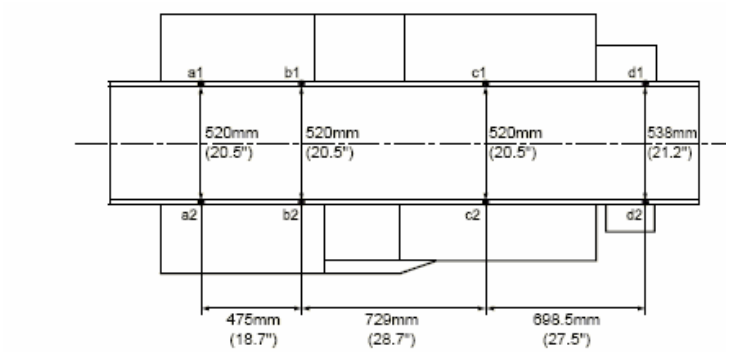

Point weight

a1	a2	b1	b2	c1	c2	d1	d2	e1	e2	f1	f2	Total
130	130	130	130	612	612	612	612	612	612	65	65	about 4,320

(Unit: kg)

a1	a2	b1	b2	c1	c2	d1	d2	e1	e2	f1	f2	Total
286.6	286.6	286.6	286.6	1,349	1,349	1,349	1,349	1,349	1,349	143	143	about 9,524

(Unit: lbs.

Oil Pan Setup

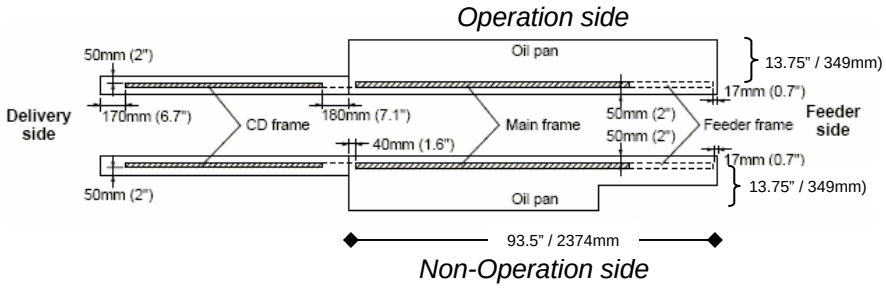

PRESSTEK 34DI

Site Preparation Guide

☐ **PRE-SITE** ☐ **34DI-X**
☐ **FINAL INSPECTION** ☐ **34DI-E**

Customer Information

Company Name			**Account No.**
Street Address			
City, State, ZIP, Country			**Phone**
Contact	**Title**	**Email:**	
Pressroom Manager		**Prepress Manager**	
Designated DI Press Operator(s)			
Type of Business	**# of shifts**	**Business Hours**	**Access times for Presstek personnel**
Presstek Sales Representative & Phone:			

Current Equipment

Front-end Systems:	**Quantity**	**Mac / PC / Other Model Type & Operating System**	**Primary Function**

Applications & Workflows

MAC Applications

	Ver. #
☐ Quark XPress	_____
☐ Pagemaker	_____
☐ Illustrator	_____
☐ Freehand	_____
☐ Photoshop	_____
☐ Acrobat PDF	_____
☐ ArtPro	_____
☐ InDesign	_____
☐ OTHER:_____	

Trapping & Imposition

	Ver. #
☐ Trapwise	_____
☐ Preps	_____
☐ Presswise	_____
☐ ImpoStrip	_____
☐ Dynastrip	_____
☐ Quite Imposing	_____
OTHER:	_____

Workflow System for DI-Write:

	Ver. #		Ver. #
☐ Agfa Apogee	_____	☐ Fuji Celebra	_____
☐ Agfa Taipan	_____	☐ Heidelberg Delta	_____
☐ Artquest	_____	☐ Heid. MetaDimension	_____
☐ Artworks/PCC/Nexus	_____	☐ Screen Trueflow	_____
Product:_____		☐ Xitron Navigator	_____
☐ Eskographics	_____	☐ Xitron Xenith	_____
☐ Creo Prinergy	_____	☐ OTHER:	_____
☐ Creo Brisque/PSM	_____		
	_____		

PC Applications

	Ver. #		Ver. #
☐ Word	_____	☐ OTHER:_____	_____
☐ Ms Publisher	_____	☐ OTHER:_____	_____
☐ Corel Draw	_____	☐ OTHER:_____	_____
		☐ OTHER:_____	_____
		☐ OTHER:_____	_____
OTHER:_____		☐ OTHER:_____	_____

File Formats and/or Formats rec'd by customers

☐ PostScript	☐ PDF/X	☐ TIFF-IT	☐ DCS
☐ PDF	☐ 1-bit TIFF	☐ EPS	☐ DCS2
☐ PDF 1.3		☐ JPEG	☐ OTHER:
☐ PDF 1.4			

Proofing

☐ Analog Mfg./Type: _____
☐ Digital Mfg./Type: _____ RIP: _____
Color Mgmt: _____ DPI(s):_____ LPI(s):_____Dot Shape(s): _____

Please FAX pages 7-16 to 603-546-4234 or email to: orderadmin@presstek.com

Installation Space / Pressroom Environment

- The press dimensions and noise levels are shown below.
- There should be enough space between the wall and press to allow operation and maintenance
- Room height minimum 7'3" / 2200mm
- Check the entrance of the room that the press will be installed in:
  1800mm (w) x 1800mm H (5'10" x 5'10")

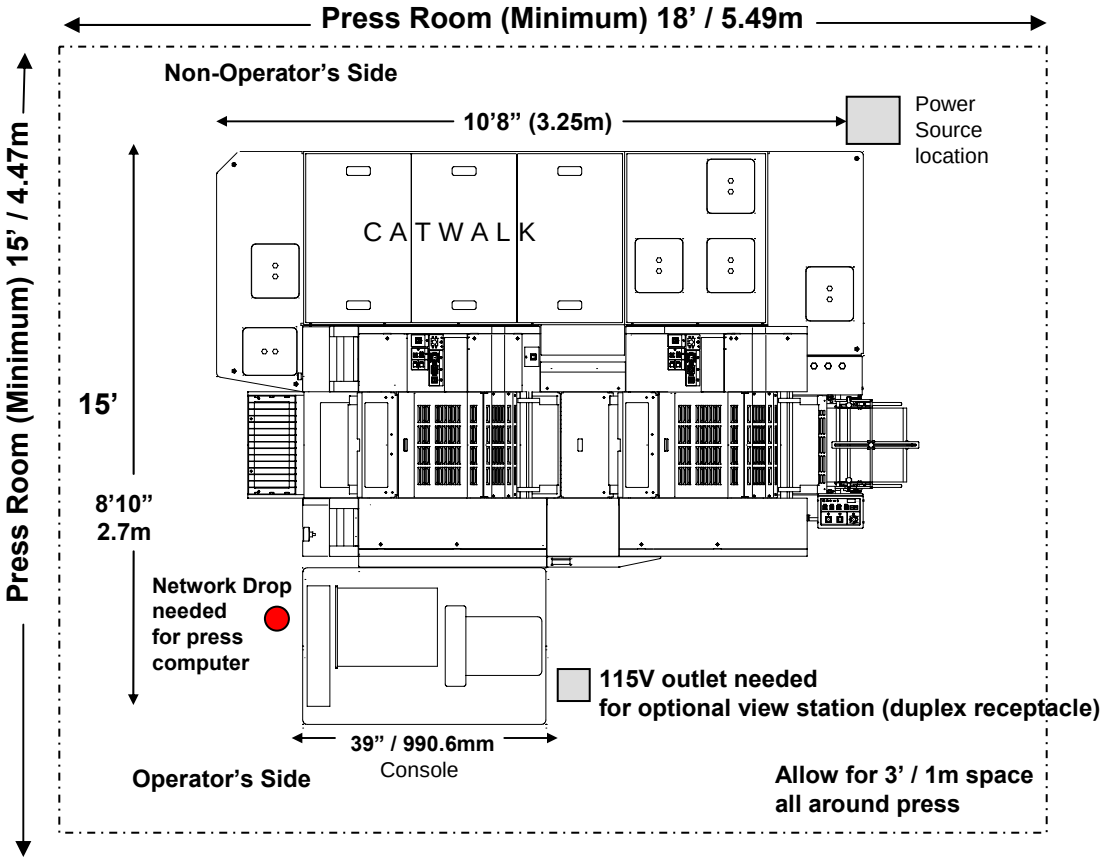

Room temperature requirement 24/7: 68-77F 20-25C
Humidity: 50-60% RH stable

Room temperature and humidity must be monitored and maintained on a 24-hour basis.

HVAC capacity must be sufficient to counteract all heat generated by system components listed on page 5.

A thermostat should be located in close proximity to the press.

Customer acknowledgment: _____ (initials)

Electrical Requirements

Press: **U.S. 208v Three (3)-Phase Max. rated current: 60Hz / 60 Amp**
Plus One (1) 115V outlet for press viewing station – a duplex receptacle would provide additional convenience.

RIP Computer: Minimum of three (3) standard wall outlets (U.S. – 110 v). Line protector and/or UPS battery-backup power system is recommended. Customer is responsible for providing a network patch cable from RIP computer to DI Press (not to exceed 300 ft. in length).

A special transformer is provided for all European installations. The site power source will connect to the transformer, which connects to the press. Transformer MUST be located within 30' / 9.14m of press.

RIP COMPUTER: Minimum of three (3) standard wall outlets (U.S. – 110 v, Europe – 220 V)

Line protector and/or UPS battery-backup power system is recommended. Customer is responsible for providing a CAT5 or better network patch cable with RJ45 ends from RIP computer to DI press (not to exceed 300 ft. in length).

⚠ Special electrical standards must be met during installation:

1. Press is properly grounded in compliance with all local electrical codes.
2. The intended electrical connection is dedicated exclusively for the press.
3. The customer is responsible for providing electrical service.
4. A licensed Electrician must be present at the time of connection to supply.

Customer understands electrical requirements and customer's responsibility to provide same prior to installation and thereafter for effective use.

☐ Customer acknowledgment_____(customer initials)

Current Equipment

Network & File Transfer

NOTE: The DI Press should not be on the main customer network due to large file sizes being transferred from the RIP computer.

The DI Press is networked to the RIP computer in a peer-to-peer configuration.

☐ **Does customer have adequate internet firewall and virus protection?** ☐ Y ☐ N

Network Switch: ☐ Y ☐ N ☐ 10BaseT ☐ 100BaseT ☐ 10-100BaseT ☐ Gigabit ☐ Other
# of Ports Available:_____

Servers: ☐ Yes ☐ No

If YES, type and and Role: _____

Plate Imaging

☐ **Analog** **Mfg/Type:**_____

☐ **Digital** **Mfg:**_____ **RIP**_____ **Plate brand:**_____
LPI's:_____ **DPI:**_____ **Dot Shape:**_____

Printing Presses

Mfg./Model	# of units	Size	Average Job Type		

Floor Requirements -- Total press weight is 14330 lbs. / 6500 kg + ECO UV System

Type of Floor: ☐ Concrete ☐ Wood ☐ Other:_____

A 6" concrete floor is strongly recommended by the manufacturer

If concrete, is floor: ☐ Bare ☐ Level ☐ Painted or Sealed ☐ Tile/Vinyl Flooring

☐ Other Covering:_____

Is covering to be removed? ☐ Y ☐ N

Cracked? ☐ Y ☐ N

Single slab ☐ Multiple slabs ☐

If multiple, will press overlap more than one slab? ☐ Y ☐ N

The load capacity of the floor needs to be determined considering the jack up bolt position and the point weight on each bolt.
Load capacity per sq. meter is over 850kg.
Load capacity per square foot is over 175 lbs.

Press Room Environment

Room Temperature 24-7: 68-77 F 20-25 C
Humidity: 50-60% RH Stable

Due to the heat output of the DI Press system, modifications may need to be made to the customer's current HVAC capacity.

A constant/stable temperature and relative humidity is critical to the operation of the Presstek 52DI. Fluctuations in either value outside of the recommended range will adversely affect press operation, press durability and print quality.

- Room temperature and humidity should be monitored and must be maintained on a 24-hour basis.
- Direct heat sources SHOULD NOT be placed near press.
- Overhead ventilation units SHOULD NOT be placed directly above the press.

Location of Press ☐ Ground Floor ☐ Other

Humidity Controlled: ☐ Y ☐ N

Observed temperature: _____degrees F

Room Ventilation: ☐ Y ☐ N

If NO to any of the above, steps to fix:_____

Type of ceiling: ☐ Exposed ☐ Dropped ceiling with_____ ☐ Tile Height of ceiling:_____

If tile: ☐ Plastic-coated ☐ Lightweight ☐ Clipped to "T-Bars"
☐ Open above tile? ☐ Return air plenum above tile? ☐ Other:_____

Fire Sprinklers: ☐ Y ☐ N
Fire Extinguisher: ☐ Y ☐ N
Has pressurized air? ☐ Y ☐ N
Cordless Phone? ☐ Y ☐ N
Has 110 v outlets? ☐ Y ☐ N
Has 220v source? ☐ Y ☐ N
Has work area? ☐ Y ☐ N

LIGHTING:
Hanging lights above the press should be avoided.
For dropped ceilings, lighting should provide 60-70 footcandles (645-755 lux) at work height using fluorescent fixtures. For open ceilings, use high-bay metal-halide (4,700K) lights or fluorescent fixtures with cool white luminaries (3,700K) running parallel to press and about 12" (.3 meter) outside press frames, angled toward press centerline. Luminaries should produce a white light as close to 5,000K as possible. Handheld drop lights near press for maintenance also strongly recommended.

Press Room Space Requirements

	Minimum Allowed	
Ceiling height 8'6	7'6" / 2.29m	Actual height:_____
Room width 18'	18' / 5.49m	Actual width:_____
Room depth 22'	15' / 4.47m	Actual depth:_____

Distance from RIP Computer to DI Press:_____

RIP Computer is typically placed in Prepress Department. Customer is responsible for providing CAT5 or better network cable with RJ45 ends to connect the RIP computer to the press console computer (not to exceed 300 ft.)

Storage Area with Fireproof Cabinets, shelves: is required for all press-related supplies. Area may be within actual press room or separate. Plumbing and sink are recommended. At least one work table will be needed for maintenance activities.

Pressurized air with blower attachment and at least 50' / 15.24m of air hose within reach of press is **recommended.**

At least 3' / 1m free space on each side of the press is mandatory.

Cordless phone or phone within immediate reach of press operator stand is highly recommended.

Press SHOULD NOT BE LOCATED near external windows.

Shipping Crate Dimensions

The system will be transported in jigs, crates and cartons before being unpacked on site. These containers are large. Therefore, particular attention MUST be paid to ceiling heights, Door openings and hallways/corridors. All crates MUST be transported upright.

Crate dimensions are as follows:

	Width (in./mm)	Depth (in./mm)	Height (in./mm)	Weight (lbs/ kg)
Press	59.25 / 1505	118.5 / 3009.9	79 / 2006	9020 / 4086.1
Accessories Box 1	59.5 / 1510	88.5 / 2247.9	55 / 1397	1782 / 807.3
Accessories Box 2	48.5 / 1231.9	56.5 / 1435.1	49 / 1244.6	726 / 328.9
Accessories Box 3	60 / 1524	42 / 1066.8	48 / 1219.2	200 / 90.6
Lifting Guage	70.5 / 1790.7	52 / 1320.8	19 / 482.6	704 / 318.9
RIP Computer	31 / 787.4	48/ 1219.2	26 / 660.4	126 / 57.1

RIP Computer is skid with two (2) boxes

Delivery and Building / Room Access

Is loading dock available? ☐Y ☐N

Is dock accessible to semi-truck? ☐Y ☐N

Special instructions for truck driver:_____

_____

Is fork lift available? ☐Y ☐N If yes, capacity:_____

Is crane available? ☐Y ☐N If yes, capacity:_____

Is pallet jack available? ☐Y ☐N If yes, capacity:_____

Is there a storage/staging area? ☐Y ☐N

Will uncrating be completed ☐Inside ☐Outside

Is path from storage/staging area to press room free of obstructions? ☐Y ☐N

If NO, describe:_____

Any hallways/corridors from storage/staging area to press room? ☐Y ☐N

If YES, dimensions of smallest hallway/corridor:_____ # of hallways:_____

Any doorways from storage/staging area to press room? ☐Y ☐N

If YES, dimension of smallest doorway opening:_____

NOTE: A path free of any obstructions (other machinery, railings, posts, plumbing, etc.) and inclines (ramps or steps) is critical. If elevators are to be used, they must be large enough to encompass press and able to bear press weight. On entire path, the floor should be able to support press weight (175lbs/sq. ft – 850kg/sq. m) plus fork lift or pallet jack.

ROOM LAYOUT WORKSHEET Each square: 1 sq. yd / 1 sq.m

Draw proposed layout for Presstek 34DI & accessories placement within press room.

Notes:

Items to plan for:

-Press
-Table(s)
-Storage cabinet(s)/shelves for inks, chemicals, spare parts, tools, etc.
-Dollies
-Pallets of paper
-Recycle bin(s)
-Trash Can(s)

Operator Information

At least one person should be designated as the 'Press Operator" with another as the "Prepress Specialist." When the installation is complete, training commences with both individuals on the different facets of press operation. It is highly recommended the press and prepress operators be present at the time of installation.

Press Operator and Prepress Operator Training Certification forms will be completed and signed by the operator, the instructor(s) and the owner. A training follow-up date and further training recommendations will be established at the time of Installation Signoff.

DI Press Operator Recommended Qualifications:

- 4 color printing experience
- 2 to 3 years single or two-color offset press operation minimum
- working understanding of offset printing conditions, roller settings, blanket packing & mounting, paper handling, ink characteristics and operator maintenance
- comfortable operating a computer (point and click the DI Press menus).
- please inform Presstek of any language barriers prior to operator training

Prepress Operator Recommended Qualifications:

- Experience with RIPs and other output devices
- Working knowledge of prepress applications, imposition software a plus
- Basic knowledge of printing to understand trapping/overprints/knockouts/bleed and trim/reg marks
- Ability to operate a computer with Windows 7 operating system.

DI Press Operator Name (1):_____

- ❑ 4-Color Offset Printing Experience? Yes____ # of years:___ No____
- ❑ Operational knowledge of offset printing (roller settings/blanket mounting & packing) Yes___ No___
- ❑ Understands paper feed and delivery principles in an offset printing press Yes____ No____
- ❑ Able to use a computer Yes____ No____
- ❑ Is physically able to perform the normal operation and maintenance tasks Yes___ No_____

DI Press Operator Name (2):_____

- ❑ 4-Color Offset Printing Experience? Yes____ # of years:___ No____
- ❑ Operational knowledge of offset printing (roller settings/blanket mounting & packing) Yes___ No___
- ❑ Understands paper feed and delivery principles in an offset printing press Yes____ No____
- ❑ Able to use a computer Yes____ No____
- ❑ Is physically able to perform the normal operation and maintenance tasks Yes___ No_____

Prepress Operator Name (1):_____

- ❑ 4-Color Prepress and RIP Experience? Yes____ # of years:___ No____
- ❑ Knowledge of other RIPs,workflows and any imposition software? Yes_____ No_____

  List: _____
  _____
  _____

- ❑ Comfortable using Windows PC, Windows 7 operating system Yes____ No_____
- ❑ Working knowledge of desktop applications Yes_____ No_____

Customer Acknowledgment of 34DI Pre-Site Inspection

A designated Presstek DI Press Specialist has inspected the proposed site for an installation of the Presstek 34DI printing press. These findings have been shared with the customer and reviewed for accuracy. The information collected in this document does not constitute an order.

Following an official order, installation at the proposed site is contingent on any deficiencies or issues identified below.

1._____

2._____

3._____

Any deficiencies or issues noted above will adversely affect installation and operation of the Presstek 34DI. These deficiencies and issues must be remedied before installation can take place.

Customer Initials are required for the following:

1. **Customer acknowledges understanding of electrical requirements and customer's responsibility to provide same prior to installation and thereafter for effective use. Customer initials:**
2. **Customer will provide a licensed electrician to be onsite at time of install to connect power. Customer initials: 3-Phase 60A 208V.**
3. **Customer has reviewed the Electricity Usage and BTU requirements. Customer initials_____**
4. **Customer acknowledges understanding of press room environment requirements and customer's responsibility to provide same prior to installation and thereafter for effective use. Customer acknowledges that this may require an upgrade to existing HVAC equipment to accommodate the DI press system: Customer initials:_____**

   24 hrs/7 days: Customer initials
   Relative Humidity 40%-60%: Customer initials
   Room temperature 68-77F / 20-25C: Customer initials
   Thermostat to be located in close proximity to the press: Customer initials:
5. **Customer is responsible for floor requirements, floor load capacity, work space and room access. Customer initials_____**
6. **Customer is must provide a CAT5 or better network patch cable with RJ45 ends from RIP computer to DI press (not to exceed 300 ft. in length). This cable must be in place prior to installation. Customer initials:_____**
7. **Ink required for installation: Presstek recommends Toyo Aqualess Ultra MZ. Please have at least one can each of C, M, Y, K. Customer Initials**
8. **Paper stock required for installation: 100 lb. coated text long grain – 10,000 sheets**
   80 lb. uncoated text long grain – 5,000 sheet
   Customer initials_____
9. **Customer has reviewed operator qualifications for both DI Press and prepress with Presstek representative. Customer initials_____**

Customer signature:_____Print Name:_____

Title:_____Date:_____

Presstek DI Specialist:_____Date:_____

For Presstek use only:

Approved by:_____Title:_____Date:_____

Please FAX pages. 7-16 to 603-546-4234 or email to: orderadmin@presstek.com

Final Inspection

Onsite ☐ **Telephone** ☐

All information documented during the pre-site inspection has been verified. Furthermore, any deficiencies and/or issues noted above have been remedied to the satisfaction of Presstek personnel.

Any exceptions are noted here:

_____

_____

_____

_____

Customer signature:_____

Print Name:_____

Title:_____

Date:_____

Presstek DI Specialist:_____Date:_____

For Presstek use only:

Approved by:_____

Title:_____Date:_____

Please FAX pages 7-16 to 603-546-4234 or email to: orderadmin@presstek.com

Paper, Inks, Waste Disposal & Recycling:

Paper:

Numerous vendors offer paper stocks for use with the Presstek 34DI.

Paper thicknesses ranging from 0.0024 -0.02" / 0.06-0.5mm are

compatible.
The maximum press sheet size is 20.07" x 14.6" (520 x 375mm)

The minimum press sheet size is 10.12" x 7.17" (257 x 182mm)

When choosing a sheet size, it MUST be remembered the press uses **0.36" / 9mm for the gripper margin**. Different types of papers react differently under actual printing conditions. Please consult your paper vendor for more information.

Paper needed for installation: 100lb gloss text long grain – 10,000 sheets
80lb uncoated text long grain – 5,000 sheets

Inks:

Numerous vendors also supply inks for use with the Presstek 34DI. Process (CMYK) and spot inks (such as Pantones) may be used. All inks must be waterless. **Presstek recommends Toyo Aqualess Ultra MZ. To insure a smooth installation and training, please have at least one can of C, M, Y, K.**

Waste Disposal and Recycling:

Means and procedures for Hazardous Waste Disposal and Recycling should also be in place prior to installation. Some chemicals used for press operation and cleaning require proper disposal. As always, disposal should follow all local and federal guidelines.

Operator Training (Press and Prepress):

At least one person should be designated as the 'Press Operator" with another as the "Prepress Specialist." When the installation is complete, training commences with both individuals on the different facets of press operation. It is highly recommended the press and prepress operators be present at the time of installation.

Press Operator and Prepress Operator Training Certification forms will be completed and signed by the operator, the instructor(s) and the owner.

DI Press Operator Recommended Qualifications:
- 4 color printing experience
- 2 to 3 years single or two-color offset press operation minimum
- working understanding of offset printing conditions, roller settings, blanket packing & mounting, paper handling, ink characteristics and operator maintenance
- comfortable operating a computer (point and click the DI Press menus).
- please inform Presstek of any language barriers prior to operator training

DI Prepress Operator Recommended Qualifications:
- Experience with RIPs and other output devices
- Working knowledge of prepress applications, imposition software a plus
- Basic knowledge of printing to understand trapping/overprints/knockouts/bleed and trim/reg marks
- Ability to operate a computer with WIN7 operating system.

A Note Regarding Customer Supplies

The Presstek 34DI printing press requires a customer to have a variety of printing and cleaning supplies present for both installation and ongoing daily operation. In the case of printing plates and cleaning towels, this is in addition to what is supplied in the press start-up kit.

Supplies Included with the Press:

- Small container of pump oil
- Intergraded grease gun, pre-loaded with grease P/N 92504042
- Extra sucker feet
- Extra sheet separators
- Oil gun / no oil
- Ink Knives – 4
- Blankets – 4. They will be mounted at installation
- One box of plates. These are for set-up. There is no obligation for these to be used in live production or training. P/N AMM11741
- Manual grease gun – no grease
- Two rolls of cleaning towels (for internal plate cleaning) P/N RYY03611
- Mechanical tools
- Two (2) paper pile boards
- Cleaning tools
- Small sheet delivery extension
- Small sheet and envelope feed table adapter
- Two delivery dollies
- Solvent pump container for any manual cleaning

Customer Must Have for the Install (most items available from www.shoppresstek.com).

- IPA 90%
- Solvents – 1) VARN A-230 blanket cleaner 2) VARN roller wash
- At least one box of plates for training and early production
- Ink – Toyo Aqualess Ultra MZ – 1 kilo each color
- Spare blankets
- Cotton wipes – Webril rolls. 8” x 8” squares
- Paper – 100 lb coated text long grain – 10,000 sheets
  80 lb uncoated text long grain – 5,000 sheets
- Oil for central oiling system (DTE26, Viscosity: 62)
- Oil for oil gun
- Grease for grease gun
- Rags
- Densitometer: customer should own a calibrated densitometer to be able to read density and dot percent area on a printed sheet
- Blanket packing Sheets 0.010”, 0.005” and 0.008” to equal 0.028”
- Cat5 or better (RJ45 ends) crossover cable to connect Press Computer to RIP computer
- **Please refer to next page for supplies for ongoing operations.**

Supplies for Extended Operation and Production:

(Please refer to the last 2 pages for supplies you can obtain from shop.presstek.com)

• **Various types of papers**

• **Miscellaneous Supplies**:

- 6-8 bundles of rags / rag service
- 1 case of VARN ink spray (anti-skin)
- chiller filters
- plastic ink knives
- oil can
- paper wedges
- touch-up pen
- 12 x loupe
- densitometer
- floppy disks
- 1 box disposable gloves
- 2-3 rolls of Webril wipes (cotton wipes for plates & laser head)
- 1 squeeze bottle
- 4-8 spare blankets. Day International 3000 4-ply compressible Size: 20 22/32" x 13 25/32" – 26489 BAR lead and tail
- 2 rolls plate cleaning towels RYY03611
- 2-3 boxes of plates For 34DI: AMM11741
- 1 box VARN 20 micron spray powder

• **Recommended grease** – any of the following or equivalent:

- Shell – ALVANIA GREASE EP1
- Mobil – Mobilus EP1
- Esso – LITHTAN 1

• **Press oil** – 5 gal. Recommended brands for central lube system:

- Shell – TETRA OIL 32 or 46
- Mobil – Mobil DTE 24 or 25
- ESSO – Unipower MP 32 or 46

• **Manual lubrication oil** – any of the following or equivalent:

- Shell – GC OIL SE100
- Mobil – Mobil DTE Oil Heavy
- ESSO – Spartan EP 100 or TERESSO 100

• **Press Chemicals & Inks**

- 5 gal VARN V-120 roller wash and blanket wash for automatic systems
- 5 gal VARN V-253 general-purpose solvent for hand cleaning
- 1 gal VARN Super Rubber Rejuvenator
- 1 gal Isopropyl Alcohol
- 1 case each: Toyo Aqualess Ultra Z MZ Ink (Cyan, Magenta, Yellow, Black)

Supplies for Extended Operation and Production, continued:

(Please refer to the last 2 pages for supplies you can obtain from www.shoppresstek.com)

Hand Tools

- Metric Feeler Gauge
- Metric Allen Wrench Set – Metric Wrench Set
- Adjustable Wrench
- Screwdriver Set (various sizes and heads)
- Utility Knife
- Air hose (minimum 50 feet) with Blower Nozzle
- 8mm allen socket wrench & miscellaneous extensions
- 3/8" Torque wrench that reads ft/lbs. from 0 – 80
- Mini-ratchet set from MSC Direct p/n 05045109
  Here is the link: http://www1.mscdirect.com/CGI/NNSRIT?PMPXNO=1738006&PMT4NO=0

Suggested Tools

- Calipers to measure used plate roll width (in mm)
- Metric steel ruler
- Micrometer (for measuring paper thickness)

- **Cleaning Supplies:**

- Hand Cleaner (VARN Orange Scrub or equivalent)
- Safety-Kleen Parts Washer with Safety-Kleen (105 Solvent for parts wash-up)
- Squirt bottles
- Toothbrush (soft bristle)
- Scrub brush
- Safety goggles
- Silicon Recovery Bags

- **Miscellaneous**

- Lockout/Tagout Policy
- Waste Disposal Procedures
- Viewing Booth (recommended 5000K) or adequate viewing area